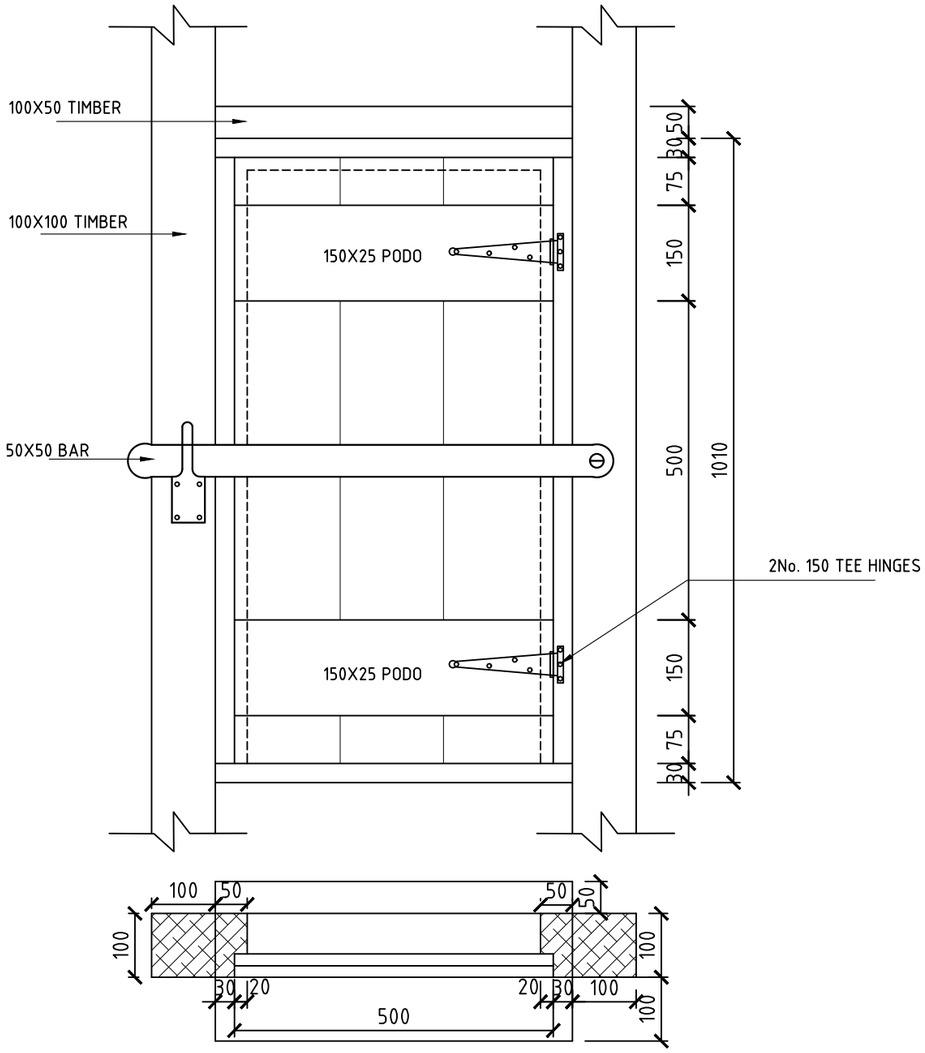

DETAIL OF WINDOW

SCALE 1:10

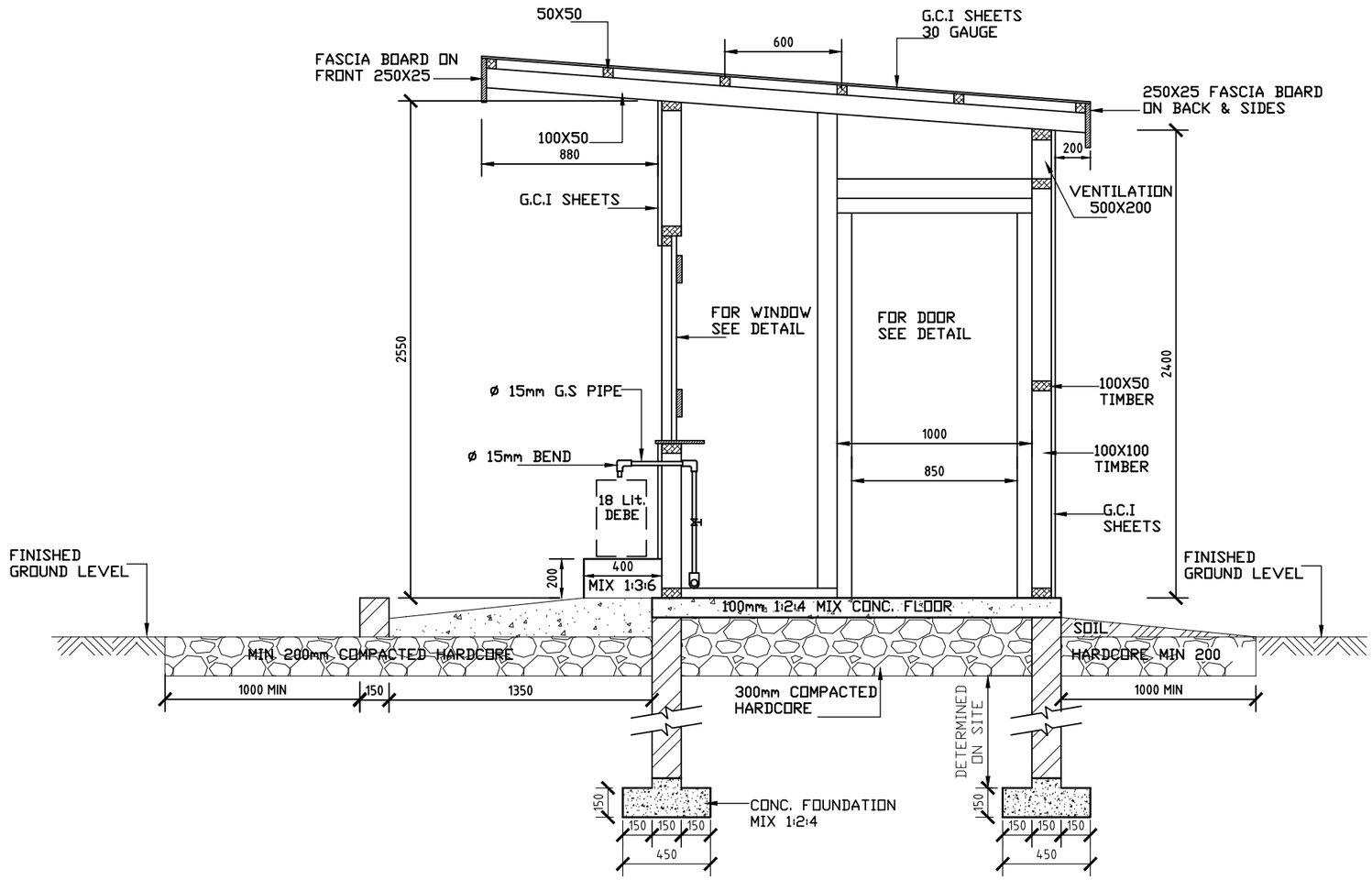

SECTION THRO' A–A

SCALE 1:25

NATIONAL ENVIRONMENTAL AUTHORITY

nema

WATER KIOSK

ALL DIMENSIONS IN MILLIMETERS

DESIGNED	ENN	Sep 2019	SHEET 2 OF 4
DRAWN	ENN		SCALE: AS SHOWN
DIGITIZED	ENN		DRG. NO.
CHECKED	ENG. GITAHI		
APPROVED	ENG. GITAHI		001